IJCRT.ORG ISSN : 2320-2882

INTERNATIONAL JOURNAL OF CREATIVE RESEARCH THOUGHTS (IJCRT)

An International Open Access, Peer-reviewed, Refereed Journal

ADVANCE BOMB DETECTION AND DISPOSAL ROBOT

Ankita Rohane[1], Tejas Shinde[2], Sumit Khamitkar[3], Amod Deshpande[4], Prachi Bhagat[5]
Electronics And Telecommunication Engineering Department, Government College of Engineering, Yavatmal

Abstract— This project is very beneficial in areas of high risk for humans to enter for detecting the harmful and suspicious. This system makes use of robotic arm as well as robotic vehicle which helps not only to enter an area involving high risk but also to pick objects. The whole system is controlled via Radio frequency remote control. The system sends commands to the receiving circuit mounted on the vehicle through push buttons. The receiving circuit involves microcontroller and a receiver which receives commands sent by the transmitting circuit. At first the system is set to control the movement of vehicle, in order to set the system in a mode that operates the arm. At first the user needs to press the push buttons for moving the vehicle in direction we want to direct i.e., Forward, backward, right or left and it can rotate 360 degree. In order to make the arm movement, the user needs to long press the forward and backward push buttons. Thus, this system makes use of camera, robotic arm and robotic vehicle to enter a high-risk involving area and also to pick, move and drop an object as well as record the place when robot will visit and keep it for future reference keeping record.

Index terms – Microcontroller, RF remote, robotic arm, wireless camera

1.INTRODUCTION

A Robot is used for bomb disposal purpose. The operation of robot is control by using wireless module so it can provide more range of operation. Also construct a basic bomb diffusing robot which can handle simple tasks like cutting wires, flip on switches, lift light objects. and a simple autonomous robot to help in the transit of the bomb. Also gives video feedback to us so effective handling of robot can be possible. Here we use robotic arm. We are going to use servo motor as actuator, Robot base will rotate 360-degree, elbow, shoulder and gripper also will move according to their directions the input to the system is from the user. This input is first processed at the control application, serially transmitted over a Radio Link. This input is then received at the robot and processed again. The output of the system is the processed signal to the appropriate module. This module can be a motor of the base of the robot or the robotic arm or robot provides an extra layer of protection to the bomb disposal squad by allowing them to check and analyze a suspicious packet before actually approaching it for disposal. Mobile robots reduce or eliminate a bomb technician's time-on-target. A robot takes risk out of potentially deadly scenarios and lets the bomb technician focus on what to do to an explosive device rather than on the immediate danger to life and limb. Even if a robot cannot reach an item for disruption, it can still be used to relay information to aid in tool and procedure selection to moving downrange. In Almost every day so many trained people get either injured or loses their lives while dealing with or trying to defuse bombs.[1] The main idea of the robot here is to serve the bomb disposal squad with proving safety and security from the dangers that they are facing in their daily lives. The characters can be real or fictional. User control, for example airplanes ,helicopters or robot and try to accomplish missions.[2]The bomb squads in India have metal detector sand may be some other equipment for detecting the bomb and disposing it, but still, they have to keep their lives at risk by going near the bomb physically or the suspicious packets without any safety and precautions. This system makes use of

robotics arm as well as robotic vehicle which helps not only to enter an area involving high risk but also to pic whatever object it wants to.[5]Our robot will serve as an extra layer of protection to the bomb squad members by giving them the facility to simply check and analyze any suspicious packet and further if detected, the robot can be instructed to diffuse it too A mobile robot generally reduces or eliminates a bomb technician's time on target. The robot also takes the danger out of potentially deadly scenarios and allows the bomb technician to focus on his work of what he needs to do to the explosive material rather than deviating on topics of the threat to life and his limbs. [1]

2.LITERATURE REVIEW

Dr. R.V. Krishnan, Reddy[1] says, "Design and implementation of Bomb Diffusion sing Surveillance Robot using R F Technology" (2010) illustrates the perks of this project are robots Controlled by hand gestures and RF remote This project is much essential for mines detection Surveillance application. In this project, RF module is used to cover a small range.

Prashant limje, Shailesh Kaikali[2] together tells," Bomb Detection and Diffusion in planes by Application of Robotics"(April 2014) in this paper also throws lights on remote bomb detonation and automatic bomb detection.

Sagar , Neha ,Apoorva Kamat, Shubhrojit Chakraborty, Vishal Pande[3] did the research, "Hand Gesture Recognition Bomb Diffusing surveillance Robot" January-March(2016),Explains that hand gesture Recognition enables the robot to be more user friendly, though the need of improving the Range of wireless communication is compensated.

V. Prasanna Balaji says [4]," A Multipurpose Robot for Military Tribute to Defense Ministry" April(2018) Describes realization of Dynamic 3D videogame. This explains the feasibility for a mission to locate and dispose a bomb placed inside an airplane in spite of its practical implications.

3.OBJECTIVE

The main goal of our project is to give safety to the bomb squad members and serving an extra line of defense while dealing with the bomb. The main objective will be accomplished only by completing several sub objectives. These sub objectives are as given below –

- Serve as distant monitoring and controlling device to check any suspicious packet (or bomb).
- To allow the user to manipulate the suspicious packet using the robotic arms.
- To give visual display from the place of the packet.
- To make the controlling of the robot such that it can be controlled very easily.
- This uses project serves as a control application, at the user end to control the robot from some distance using wireless technology.
- The bomb technician will also control the robot using a switch box. This input from the user will be transmitted serially by RF signals to the robot, where it will receive, identify and will further instruct the robotic module.
- Here the inputs from switches will be first processed at the user side, serially transmitted over a Radio Link. This input is then received at the robot and will be processed again .

4.HARDWARE REQUIRED

There is some spying robot which are controlled by remotes. Spying robot also have a camera in it and it also transmit via material or information to the, mediation group or spying up. The size of this type of robots are usually suitably small so can travel more efficiently. We have used Motor Driver L293D.These types of robot which should be handle in a secrete manner also controlled by remote, batteries, antenna.

L293D

L293D is a dual H-bridge motor driver integrated circuit (IC). Motor drivers act as current amplifiers since they take a low-current control signal and provide a higher-current signal. This higher current signal is used to drive the motors.L293D contains two inbuilt H-bridge driver circuits. In its common mode of operation, two DC motors can be driven simultaneously, both in forward and reverse direction. The motor operations of two motors can be controlled by input logic at pins 2 & 7 and 10 & 15. Input logic 00 or 11 will stop the corresponding motor. Logic 01 and 10 will rotate it in clockwise and anticlockwise directions, respectively. Enable pins 1 and 9 (corresponding to the two motors) must be high for motors to start operating. When an enable input is high, the associated driver gets enabled. As a result, the outputs become active and work in phase with their inputs.

ESP32

ESP32 is a series of low-cost, low-power system on a chip microcontroller with integrated Wi-Fi and dual-mode Bluetooth. The ESP32 series employs either a Tensilica Xtensa LX6 microprocessor in both dual-core and single-core variations, Xtensa LX7 dual-core microprocessor or asingle-core RISC-V microprocessor and includes built-in antenna switches, RF balun, power amplifier, low-noise receive amplifier, filters, and power-management modules.

METAL DETECTOR

Metal detector is a device that can detect metal, the basics can make a sound when it is near some metal. Metal detectors work on the principle of transmitting a magnetic field and analyzing a return signal from the target and environment. when some metals are coming close to the coil the amplitude of the reflective pulse is getting little lower and a duration of the pulse a little longer. The need for detection is very clear to protect our self from any kind of danger. The operation of a metal detector is based on the principle of electromagnetic induction. Metal detectors contain one or more inductor coils. When metal is placed in a close proximity to a varying magnetic field (generated by the coil or coils), currents are induced in the metallic part. These currents are called eddy Currents. The eddy Currents, in turn, induce their own magnetic field (called eddy field).These fields act in such a direction as to oppose that generated by the coils. The resultant field and using a specially designed electronic circuit can indicate the type of material being magnetized.

GRIPPER

A gripper is a motion device that mimics the movements of people, in the case of the gripper, it is the fingers. A gripper is a device that holds an object so it can be manipulated. It has the ability to hold and release an object while some action is being performed. The fingers are not part of the gripper, they are specialized custom tooling used to grip the object and are referred to as "jaws.

BO MOTORS

Bo motor (Battery Operated) lightweight DC geared motor which gives good torque and rpm at lower voltages. Here you can get BO motor with varying rated speed. This motor can run at approximately 200 rpm when driven by a single Li-Ion cell. Great for battery operated lightweight robots. The motor has the ability to operate with minimum or no lubrication, due to inherent lubricity. The motor is ideal for DIY enthusiasts. This motor set is inexpensive, small, easy to install, and ideally suited for use in a mobile robot car. They are commonly used in our 2WD platforms.

3.5 RPM DC GEARED MOTOR

3.5 RPM 12V DC geared motors widely used for robotics applications. Very easy to use and available in standard size. Also, you don't have to spend a lot of money to control motors with an Arduino or compatible board. The most popular L298N H-bridge module with onboard voltage regulator motor driver can be used with this motor that has a voltage of between 5 and 35V DC or you can choose the most precise motor diver module from the wide range available in our Motor divers' category as per your specific requirements.

500RPM DC MOTOR

This is the 500RPM 12V DC Motor, these motors are simple DC Motors featuring gears for the shaft for obtaining the optimal performance characteristics. They are known as Center Shaft DC Geared Motors because their shaft extends through the center of their gearbox assembly. These standard size DC Motors are very easy to use.

5.METHODOLOGY

The system works on the commands. This are given to the receiver via the remote which is than processed and transmitted
to the driver circuits which moves the motors. Then the commands are passed to the camera's motor and the rare wheel's motors which then moves accordingly. The footages obtained through the wireless camera are real-time transmitted to capture card of the camera and then is displayed on the screen. The base model is the car like structure that is able to move in directions as right , left, forward ,backward and it also rotates 360 degree around itself. All the functions are carried out with the remote control. The working model will be the connected car with the special robotic arm which is connected to remote control via Bluetooth module. At first the laptop and mobile will be connected to have a control and feedback from the robot. As soon as the robot detects the suspicious or harmful material frequencies from the substances under vision it will be recorded and the signals are sent to the laptop in form of feedback, hence on with the control and by commands it will dispose the harmful substance with its active and superior robotic arm.

FLOWCHART

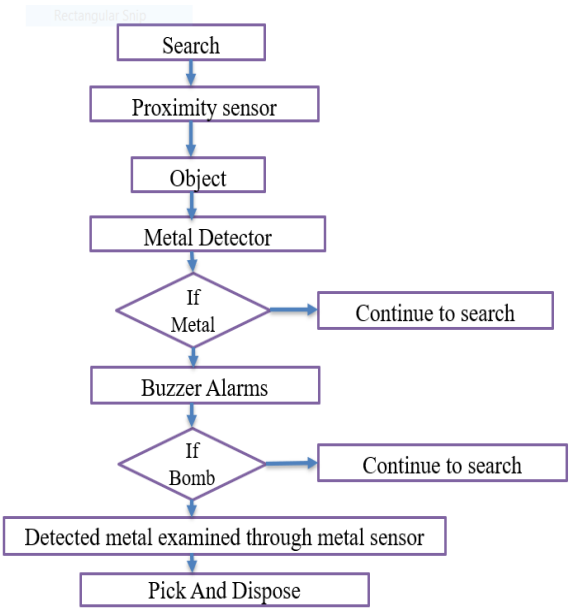

Fig1.flowchart for working model

SIMULATION CIRCUIT OF SYSTEM

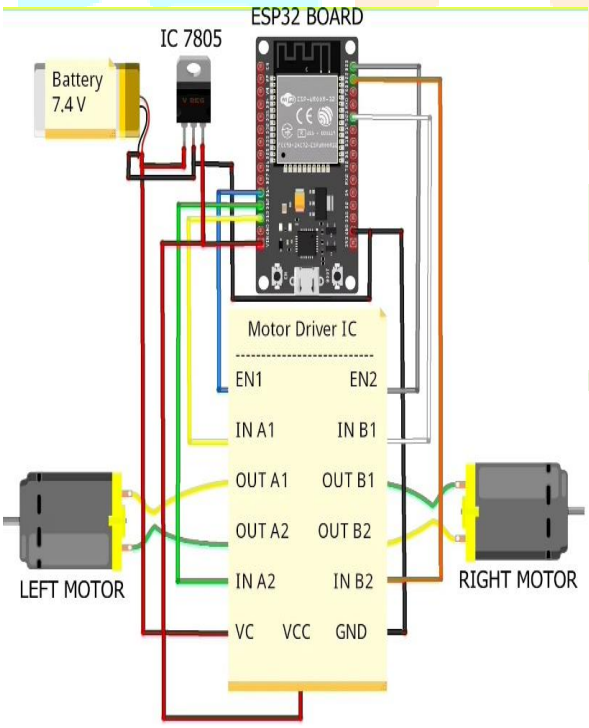

Fig2.simulation circuit of model

RESULT

This section gives the details about the results evaluation performed on this project. The essential metric for our paper would be correctness. As far as we can tell, our robot structure has created no disturbing influences, The robot moves depending on the information we provide for the remote control. Keeping the circuit direct customers have the capacity to use it more effectively The accuracy of the system is tested based on several trials; System is tested 30 times with an increasing number of various modes of operations. The main benefit we received is that the Arduino cannot perform the simultaneous working, but in our system, we executed the ESP32 Module such that it performs all the various features such
as line follower, obstacle finding, manually using app and voice control all one by one using a single android app installed in the mobile. These features made our robot easy and convenient to use in our day-to-day life.

CONCLUSION

Detection robot that we build, It detects the signal which is given and according to that it moves forward, backward, left/right and in 360^0 movements. A highly sensitive induction type metal detector is design Colpitts's oscillator principle and fixed to this robot.
Metal or bomb detector have ability to detect the metals and alerts with the buzzer to metal and bomb. This is the manner in which our project plays an important role in military as well as in daily life.

6.REFERENCES

[1]Dr. R.V. Krishnan, Reddy , "Design and implementation of Bomb Diffusion sing Surveillance Robot using R F Technology" illustrates the perks of this project are robots Controlled by hand gestures and RF remote ,This project is much essential for mines detection Surveillance application. In this project, RF module is used to cover a small range.

[2]Prashant limje, Shailesh Kaikali ,"Bomb Detection and Diffusion in planes by Application of Robotics" in this paper also throws lights on remote bomb detonation and automatic bomb detection .

[3]Sagar ,Neha ,Apoorva Kamat, Shubhrojit Chakraborty,Vishal Pande, "Hand Gesture Recognition Bomb Diffusing surveillance Robot",

Explains that hand gesture Recognition enables the robot to be more user friendly, though the need of improving the Range of wireless communication is compensated.

[4]V.Prasanna Balaji," A Multipurpose Robot for Military Tribute to Defense Ministry" Describes realization of Dynamic 3D videogame. This explains the feasibility for a mission to locate and dispose a bomb placed inside an airplane in spite of its practical implications.

[5]Military robots of the present and the future, ARMS TECHNOLOGY vol,9,No.(2010) 125-137

[6] Design and implementation of remote operated spy robot control system, International journal of science, Engineering and Technology Research (IJSETR),Volume 3,Issue 7,July 2014

[7] Design and implementation of e- surveillance robot for video monitoring and living body detection, Dr.Shantanu K.Dixit,International journal of scientific and Research publications, Volume 4,Issue 4,April 2014,ISSN 2250-3153

[8] www.army-technology.com/features/feature1720/

[9]Jump up Michael Barr."Embeded Systems Glosary".Neutrino Technical Library.Retrived 2007-04- 21

[10]Design and Implementation of a Bomb Diffusing Sevillians Robot using RF Technology,ISSN2322-0929,Vol.01,Issue.03,October-2013,105-109.

[11]www.Global-defence.com